Commercial Lighting Devices Inc

LED Wall Pack
POLYCARBONATE

Limitless Options
for the following applications:

- Security Lighting
- Entrances
- Pathways
- Perimeters

LED Polycarbonate Wall Pack is an efficient alternative to traditional metal halide and fluorescent wall packs. It delivers bright, white light while providing energy and maintenance savings over the life of the fixture.

The bronze polycarbonate housing has a die-cast aluminum mounting plate and features a prismatic lens for uniform light distribution. The integrated photosensor comes standard for dusk-to-dawn control.

c UL us LISTED

5 YEAR WARRANTY

we know light.™

LED Wall Pack - Polycarbonate

Features/Benefits

Up to 91% less energy than traditional lighting	Instant energy savings and potential rebate eligibility
Long 50,000 hour rated life	Minimizes replacements & labor costs
Integrated 120-277V photosensor	Comes standard; provides dusk-to-dawn control
Mercury free	Great for all environments
Polycarbonate housing with prismatic lens and die-cast aluminum mounting plate	Robust design protects the LEDs to withstand harsh outdoor environments; minimizes glare
UL approved for wet locations	Suitable for outdoor installation
Surface mounts to standard junction box	Easy installation and retrofit application

Specifications

Input Line Voltage	120-277V
Input Line Frequency (Hz)	50/60HZ
Lumens / Wattage	900L (13W)
Lumens per Watt (LPW)	70 LPW
Color Temperature (CCT)	5000K
Dimming	n/a
Controls	120-277 photosensor (standard)
Rated Life	50,000 hours
Operating Temperature	-40°C to 40°C
CRI	70+
Power Factor	>0.9
THD	<20%

Warranty

Five year limited warranty against defects in manufacturing

Replacement Comparison

Type	Wattage	Energy Savings (%)
TCP 900L LED Wall Pack	**13W**	**–**
120W Incandescent 150W Incandescent	120W 150W	89% 91%

c UL US LISTED

5 YEAR WARRANTY

LED Wall Pack - Polycarbonate

LED TECHNICAL DATA

Item Number	
Notes	Type

Applications

Polycarbonate Wall Packs are a highly efficient alternative to traditional metal halide and fluorescent fixtures. Ideal for outdoor applications requiring bright, uniform light including security lighting, entrances, pathways and perimeters.

Construction

- Polycarbonate housing
- Die-cast aluminum mounting plate
- Mounts to standard junction box
- Matches form and style of traditional wall packs for easy replacement

Electrical

- Integrated 120-277V photosensor for dusk-to-dawn control
- System rated for long 50,000 hour rated life
- cULus wet location rated
- 4kV surge suppression comes standard

Optics

- Prismatic polycarbonate lens for uniform light distribution

Listings

UL/cUL Listed – wet location rated
RoHS Compliant

Installation

Before installation, please consult your local ordinances and building codes for compliance

Warranty

Five year limited warranty against defects in manufacturing

Catalog Ordering Matrix

Example: TCPWPPU950KBRZPC

TCP	WPP		9			PC
BRAND	**PRODUCT ID**	**VOLTAGE**	**LUMENS PACKAGE (Power)[12]**	**CCT**	**COLOR**	**CONTROLS**
TCP	WPP – Wall Pack Polycarbonate	U – 120-277V 3 – 347V*	9 – 900 Lumens (13W)	50K – 5000K Other*	BRZ – Bronze Other*	PC – Photocell

* Special Order – consult manufacturer for minimum ordering quantity and lead times.

Performance Data

Item#	Wattage[1]	Lumens[2]	LPW	CRI	CCT (K)	DISTRIBUTION TYPE	B	U	G
TCPWPPU950KBRPC	13	900	70	70+	5000K	Type IV - Very Short	0	3	1

[1] Actual wattage may vary by +/- 10%.
[2] Approximate lumen output. Actual performance may vary based on CCT, options selected and end user application.

LED Wall Pack - Polycarbonate

LED TECHNICAL DATA

Dimensions

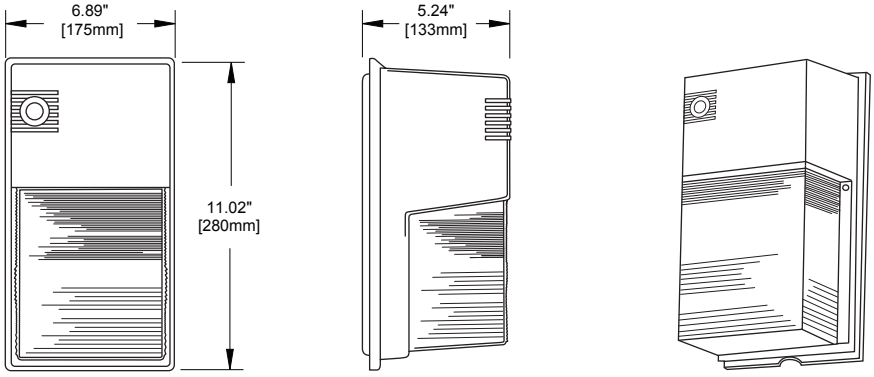

Weight
3.2 lbs (1.43 kgs)

Photometric Report

Based on photometric data for
Item # **TCPWPPU950KBRZPC**

Polar Graph

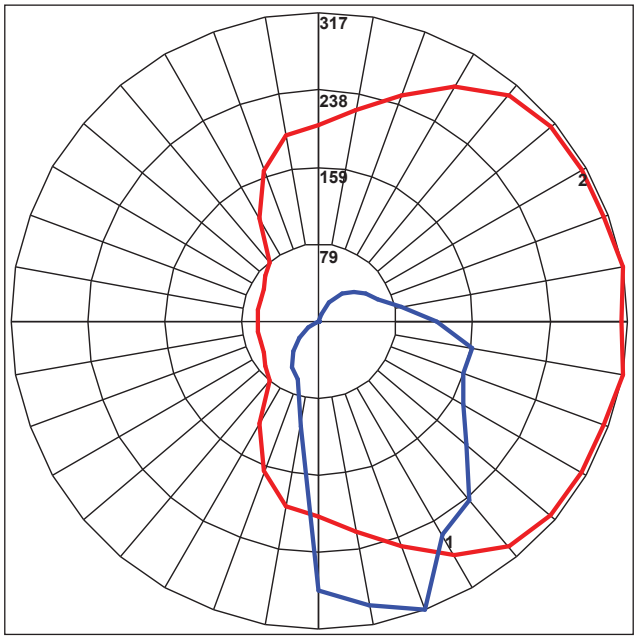

Maximum Candela = 317.3 Located At Horizontal Angle = 10, Vertical Angle = 20
1 - Vertical Plane Through Horizontal Angles (10 - 190) (Through Max. Cd.)
2 - Horizontal Cone Through Vertical Angle (20) (Through Max. Cd.)

188 South Service Rd Stoney Creek, Ontario L8E 3H6
905 662 9526 ~ cld@cldinc.ca ~ www.cldinc.ca